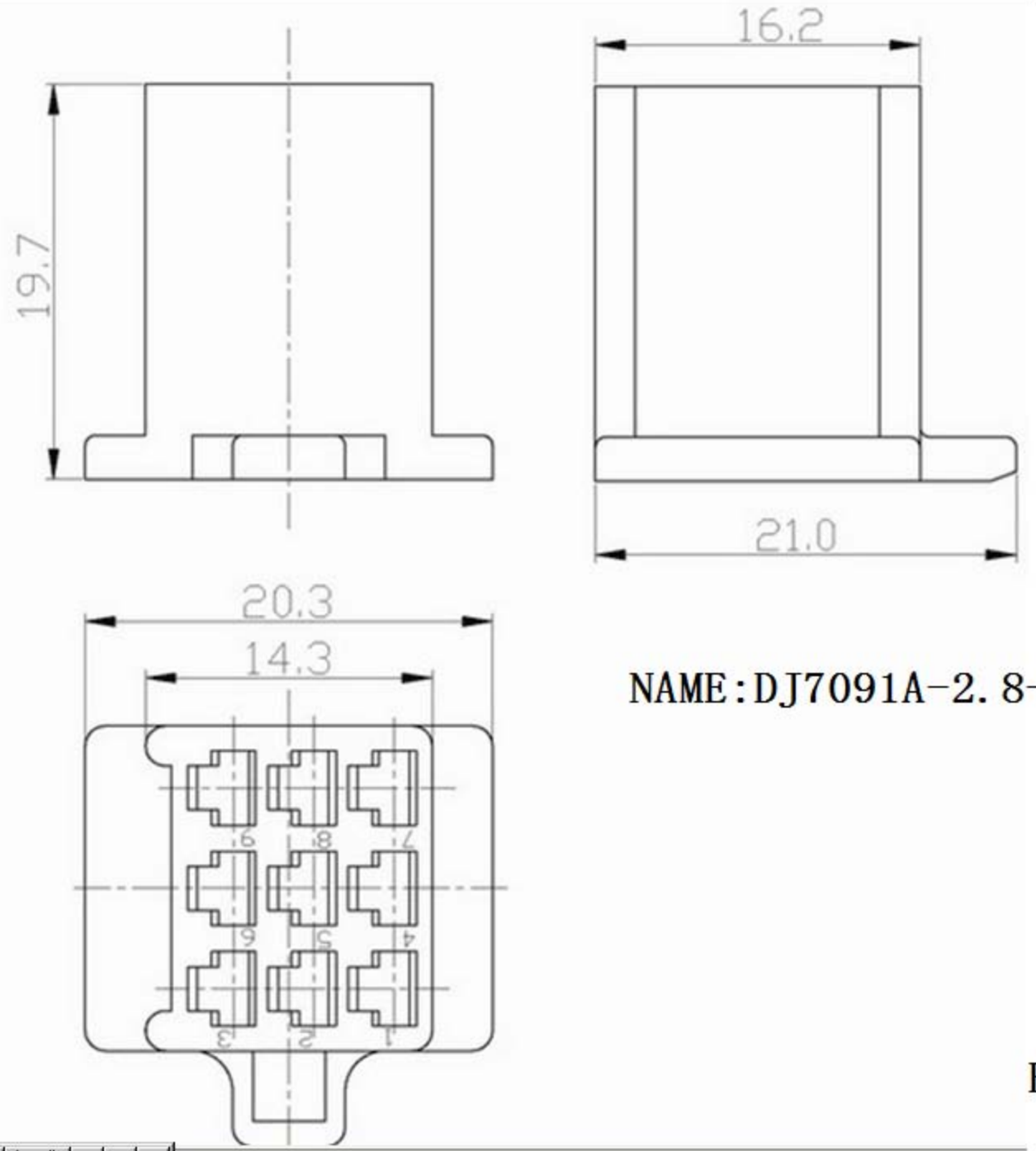

NAME:DJ7091A-2.8-21

RUI CHI